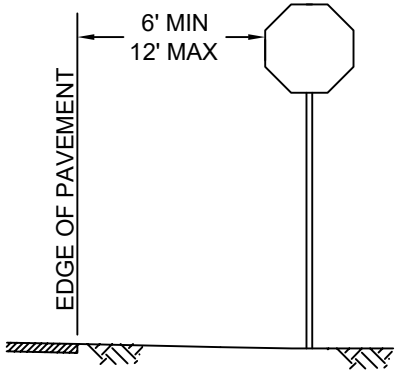

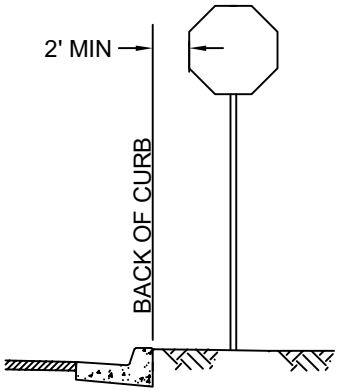

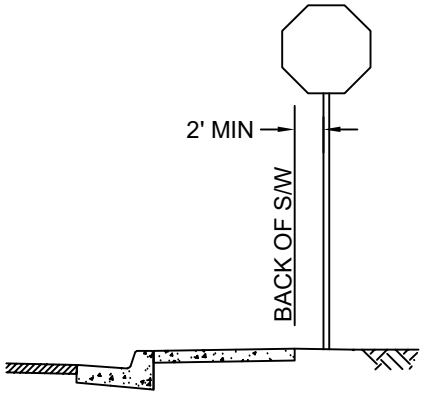

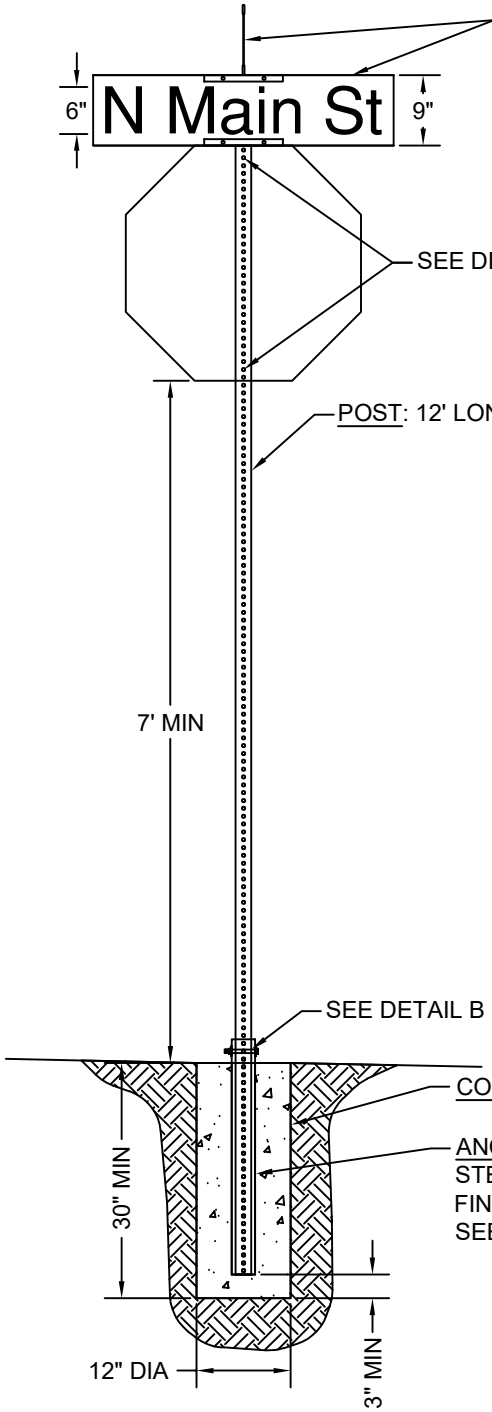

STREET NAME SIGNS: 9" TALL EXTRUDED ALUMINMUM PLATE WITH BLUE BACKGROUND AND 6" WHITE LETTERS. LENGTH VARIES. LETTER FONT SHALL BE UPPERCASE AND LOWERCASE FONT HWY GOTHIC C.

TYPICAL SIGN SIZES

SIGN	DESIGNATION	SINGLE LANE
STOP	R1-1	30" x 30"
YIELD	R1-2	36" x 36" x 36"
SPEED LIMIT	R2-1	24" x 30"

POST: 12' LONG, 12 GAUGE 2" SQUARE PERFORATED GALVANIZED STEEL TUBING

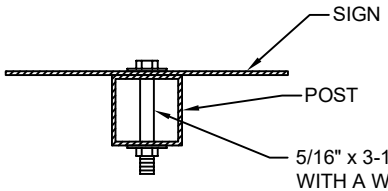

DETAIL A
SIGN MOUNTING

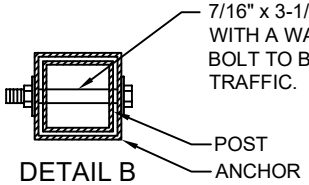

DETAIL B
ANCHOR ASSEMBLY

CONCRETE FOOTING: CLASS 'C' CONCRETE AS PER MAG SECT. 505 AND 725.

ANCHOR: 30" LONG, 12 GAUGE 2-1/4" SQUARE PERFORATED GALVANIZED STEEL TUBING. ANCHOR SHALL HAVE MINIMUM 2 HOLES EXPOSED AT FINISH GRADE. ANCHOR SHALL BE COMPLETELY TAPED TO PREVENT SEEPAGE OF CONCRETE.

NOTE:
1. ALL REFLECTIVE SHEETING MATERIAL(S) SHALL BE HIGH INTENSITY PRISMATIC.

TOWN OF CHINO VALLEY STANDARD DETAIL	SIGN POST INSTALLATION	REVISED: 10/29/18	DETAIL NO. 131CV